REV	CHANGE	DATE
B	IMAGE ENHANCEMENT	11/16/15

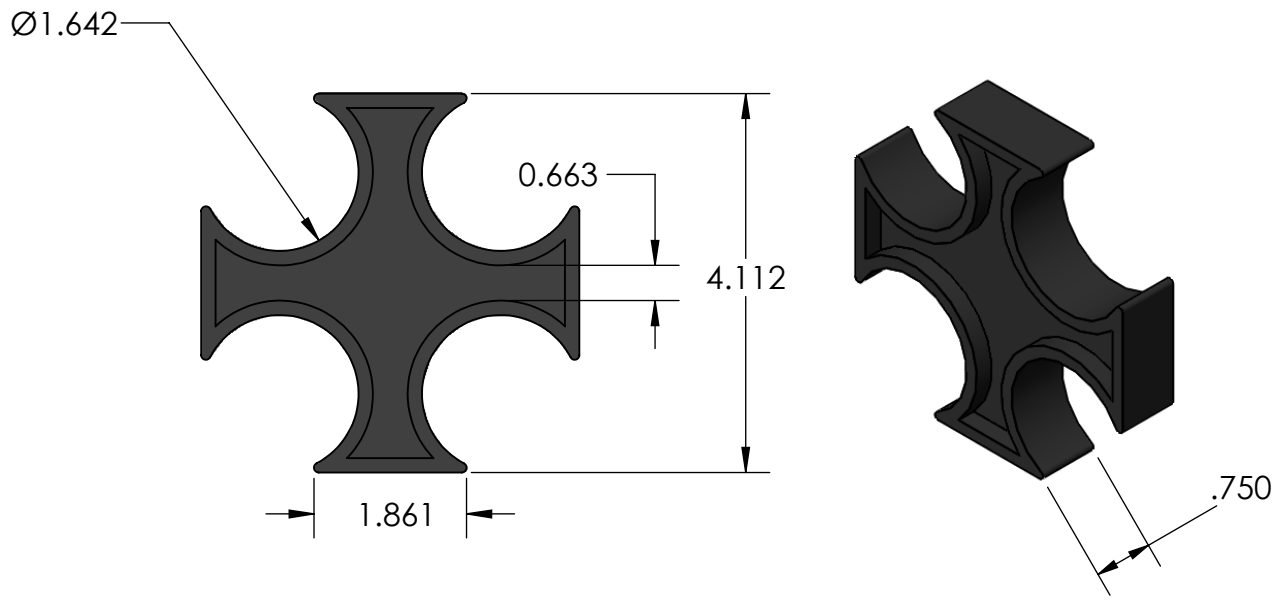

		UNLESS OTHERWISE SPECIFIED:		NAME	DATE
		DIMENSIONS ARE IN INCHES TOLERANCES: FRACTIONAL: ±1/64 ANGULAR: 0.125° TWO PLACE DECIMAL ±0.010 THREE PLACE DECIMAL ±0.005	DRAWN	HUIZAR	10/11/10
			CHECKED	F.GRO	10/11/10
			ENG APPR.		
			MFG APPR.		
		INTERPRET GEOMETRIC TOLERANCING PER:	Q.A.		
		MATERIAL ABS, BLACK	COMMENTS:		
NEXT ASSY	USED ON	FINISH			
APPLICATION		DO NOT SCALE DRAWING			

CAL AM MANUFACTURING

TITLE:

CLIP SPACER 4 WAY 1.25

SIZE	DWG. NO.	REV
A	A4W-12	B

SCALE: WEIGHT: SHEET 1 OF 1

PROPRIETARY AND CONFIDENTIAL

THE INFORMATION CONTAINED IN THIS DRAWING IS THE SOLE PROPERTY OF CALAM MFG. ANY REPRODUCTION IN PART OR AS A WHOLE WITHOUT THE WRITTEN PERMISSION OF CALAM MFG. IS PROHIBITED.

5 4 3 2 1