REV	CHANGE	DATE
B	P/N SELECTION	6/06/16

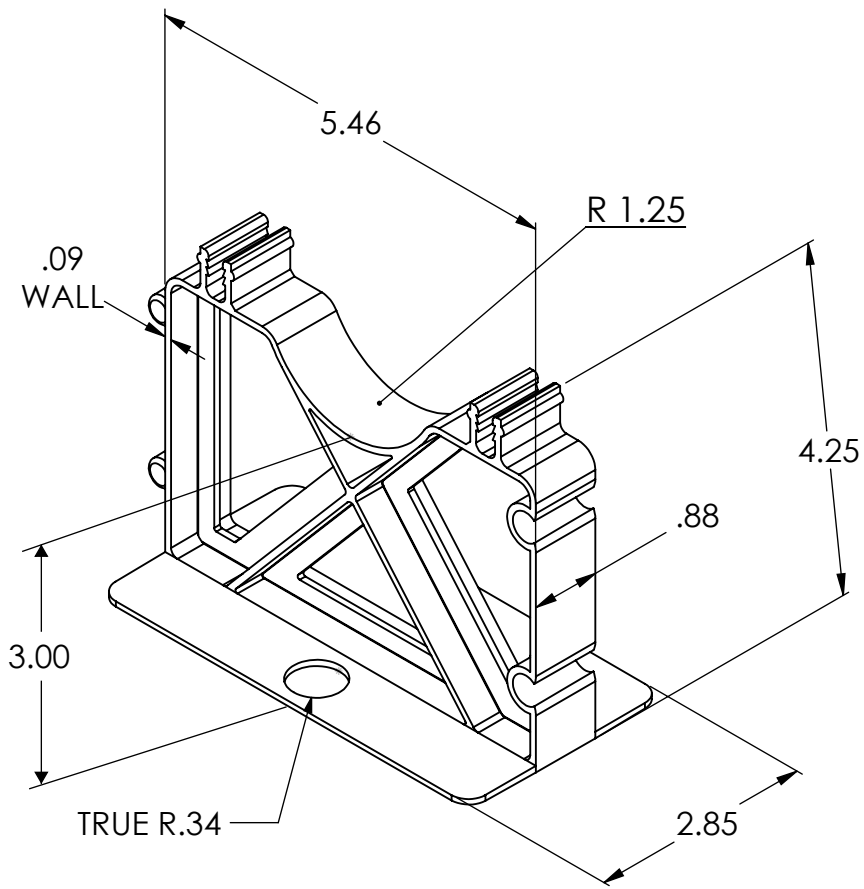

UNLESS OTHERWISE SPECIFIED:

DIMENSIONS ARE IN INCHES
TOLERANCES:
ANGULAR: ±.5
TWO PLACE DECIMAL ±.010
THREE PLACE DECIMAL ±.005

INTERPRET GEOMETRIC TOLERANCING PER:

MATERIAL HIPS

FINISH

	DATE	NAME
DRAWN	08-13-05	MIKE M.
CHECKED		
ENG APPR.		
MFG APPR.		
Q.A.		

COMMENTS:

CAL AM MANUFACTURING
Underground Electrical & Broadband Fittings

TITLE:

2" X 3"
BASE SPACER

SIZE A | DWG. NO. 4020-30 | REV B

SHEET 1 OF 1

THE INFORMATION CONTAINED IN THIS DRAWING IS THE SOLE PROPERTY OF CAL AM MFG. ANY REPRODUCTION IN PART OR AS A WHOLE WITHOUT THE WRITTEN PERMISSION OF CAL AM IS PROHIBITED.

5 4 3 2 1