REV	CHANGE	DATE
C	ADDED LENGTH	2/20/2017

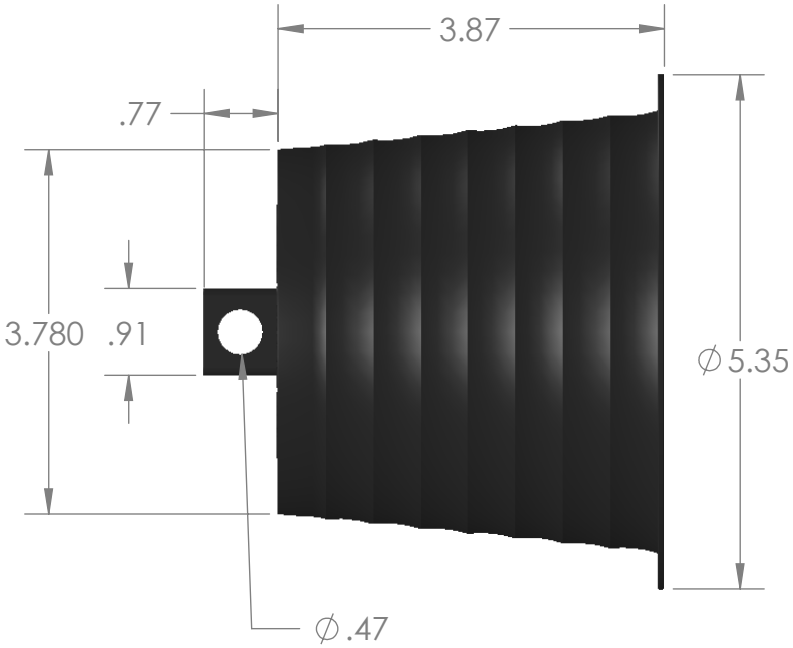

PROPRIETARY AND CONFIDENTIAL

THE INFORMATION CONTAINED IN THIS DRAWING IS THE SOLE PROPERTY OF CALAM MFG. ANY REPRODUCTION IN PART OR AS A WHOLE WITHOUT THE WRITTEN PERMISSION OF CALAM MFG. IS PROHIBITED.

NEXT ASSY	USED ON
APPLICATION	

UNLESS OTHERWISE SPECIFIED:

DIMENSIONS ARE IN INCHES
TOLERANCES:
FRACTIONAL ± 1/64
ANGULAR: 0.125°
TWO PLACE DECIMAL ±0.010
THREE PLACE DECIMAL ±0.005

INTERPRET GEOMETRIC TOLERANCING PER:

MATERIAL
LDPE BLACK

FINISH

DO NOT SCALE DRAWING

	NAME	DATE
DRAWN	HUIZAR	06/02/14
CHECKED	F.GRO	06/02/14
ENG APPR.		
MFG APPR.		
Q.A.		

COMMENTS:

CALAM MANUFACTURING
Underground Electrical & Broadband Fittings

TITLE: 4" POLY PULL PLUG WITH ROPE TAB

SIZE	DWG. NO.	REV
A	2250-040	C

SCALE: WEIGHT: SHEET 1 OF 1

5 4 3 2 1